SINGER
46K31 to K37

From the library of: Superior Sewing Machine & Supply LLC

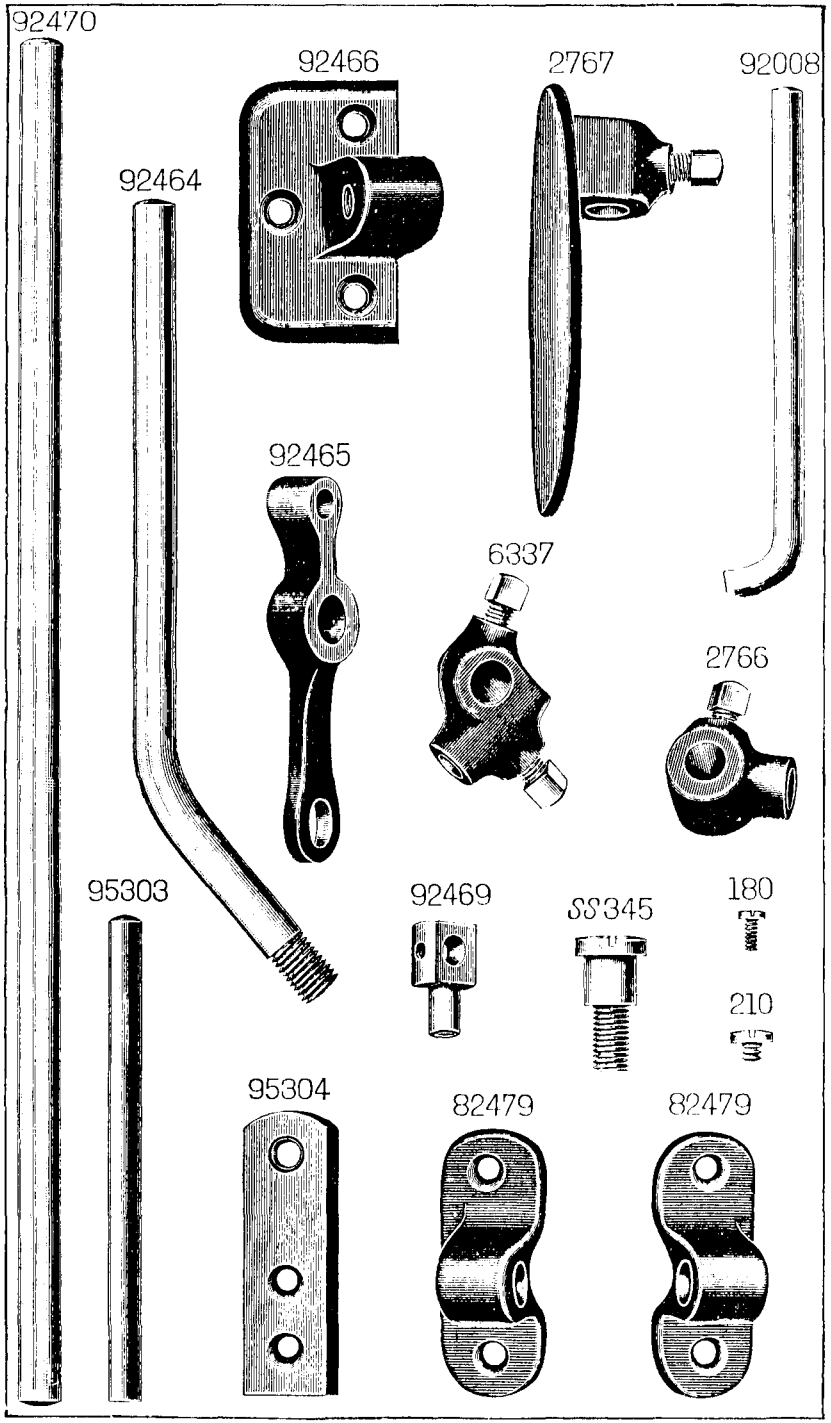

Form K2390
Sup'des K1744
Dec'r., 1922

ILLUSTRATED

LIST OF PARTS

FOR

Nos. 46K31 to 46K37

MACHINES

THE SINGER MANUFACTURING COMPANY

From the library of: Superior Sewing Machine & Supply LLC

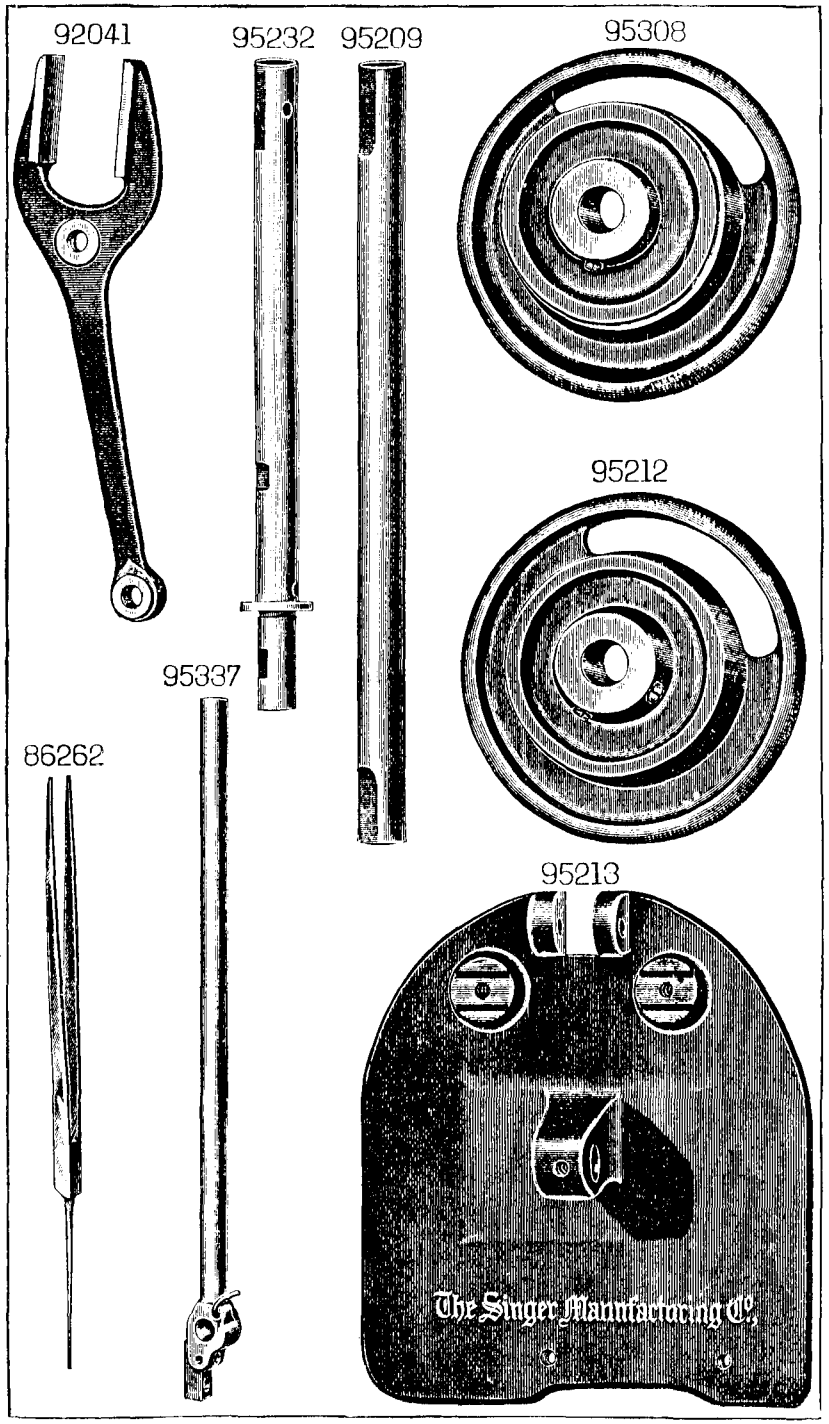

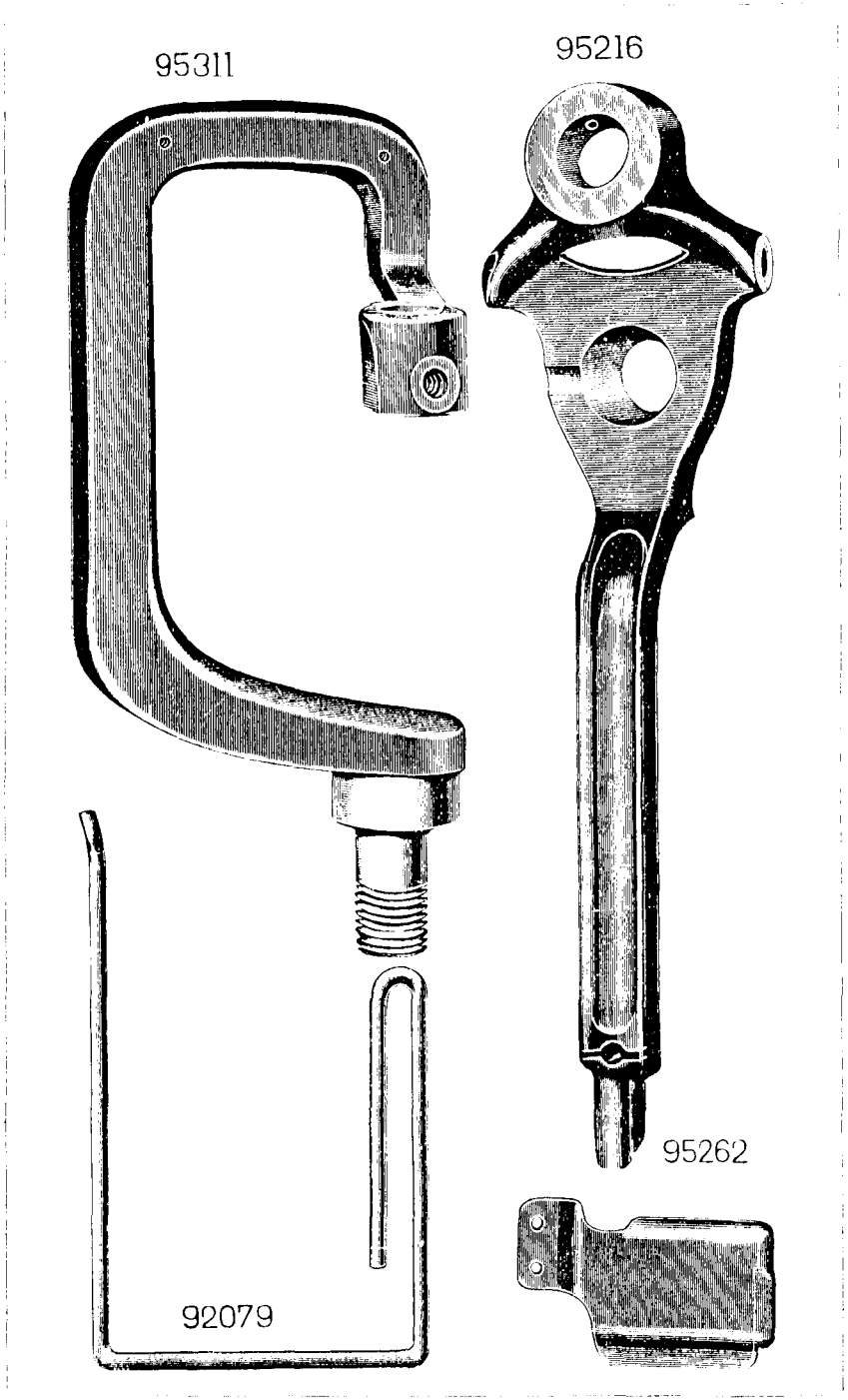

From the library of: Superior Sewing Machine & Supply LLC

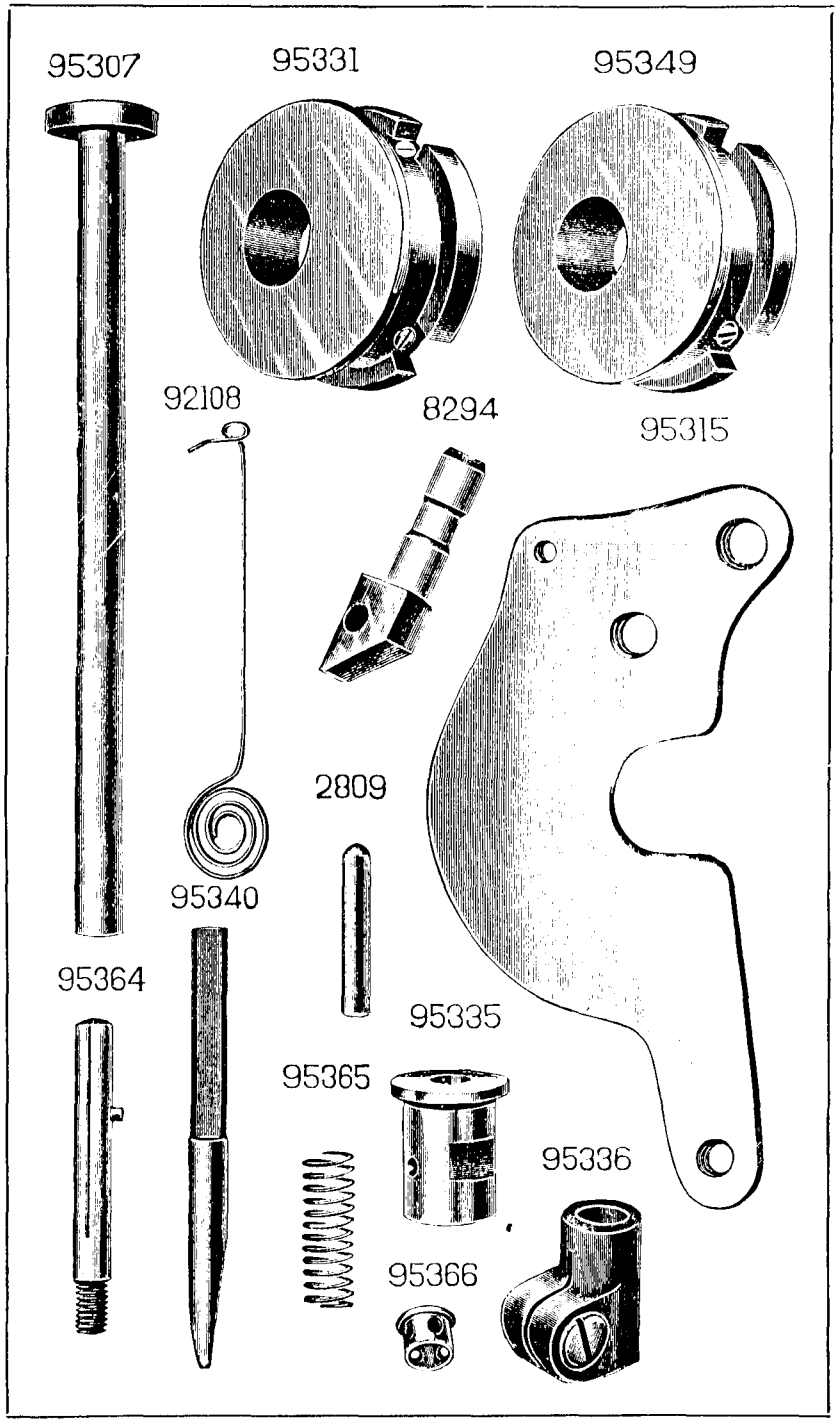

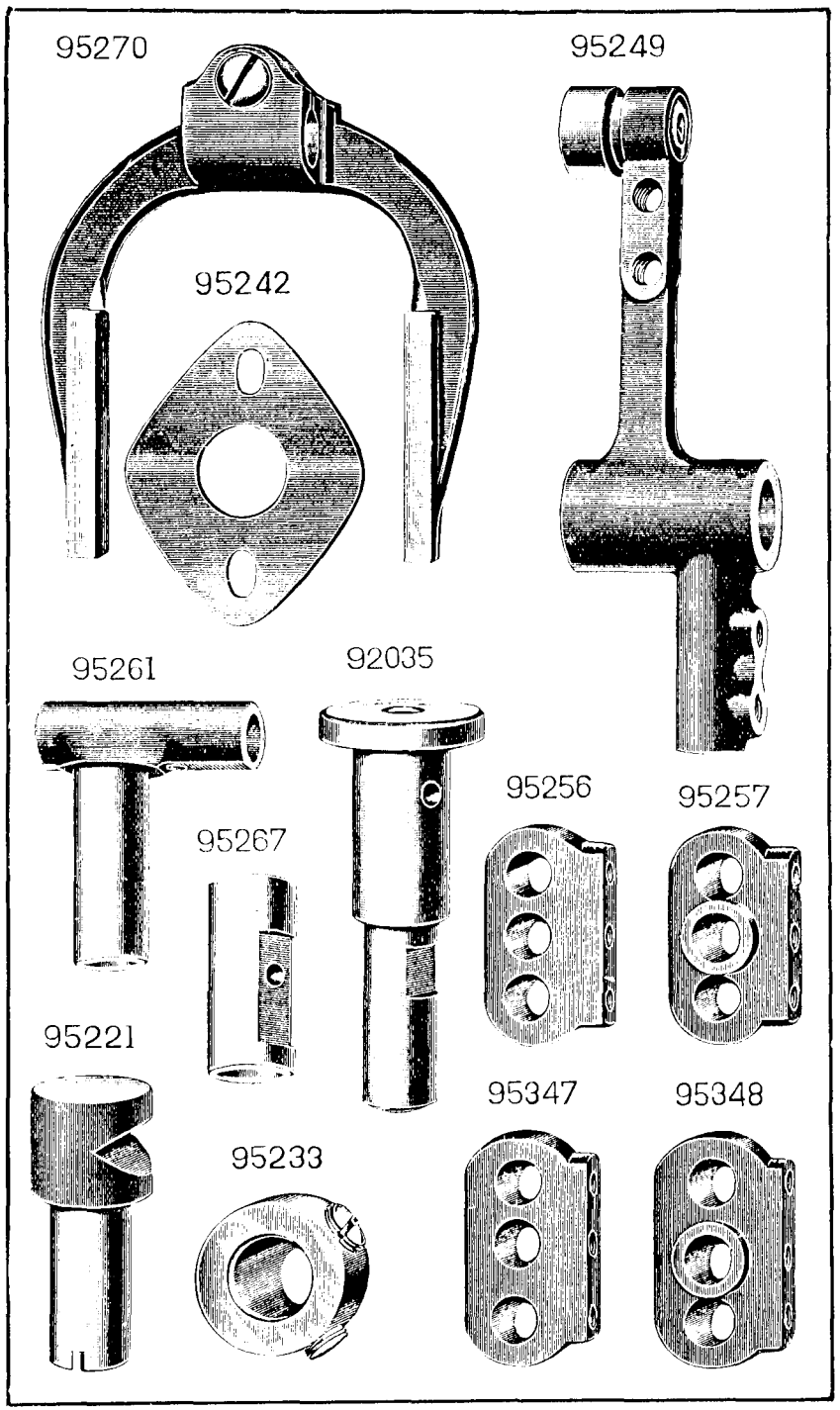

From the library of: Superior Sewing Machine & Supply LLC

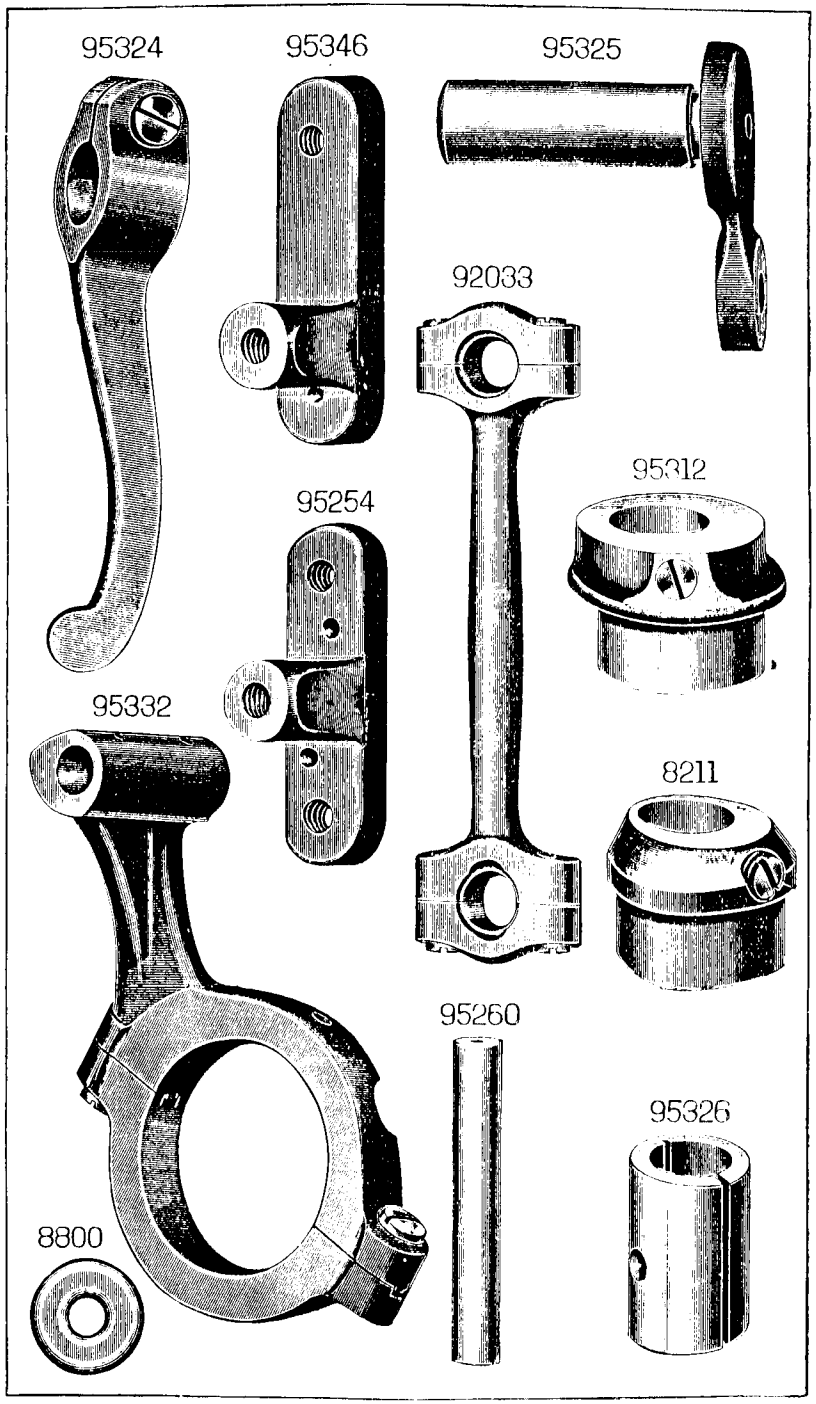

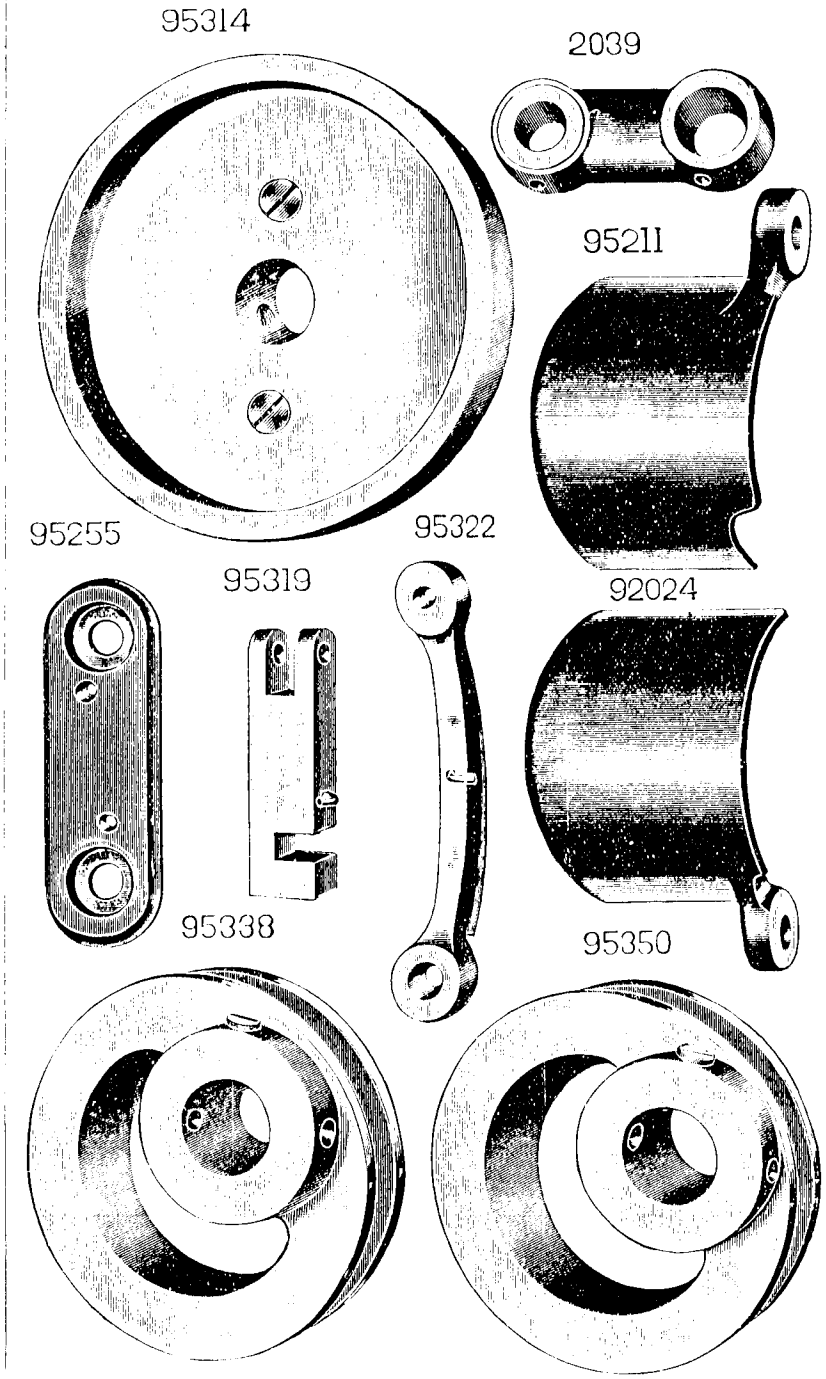

From the library of: Superior Sewing Machine & Supply LLC

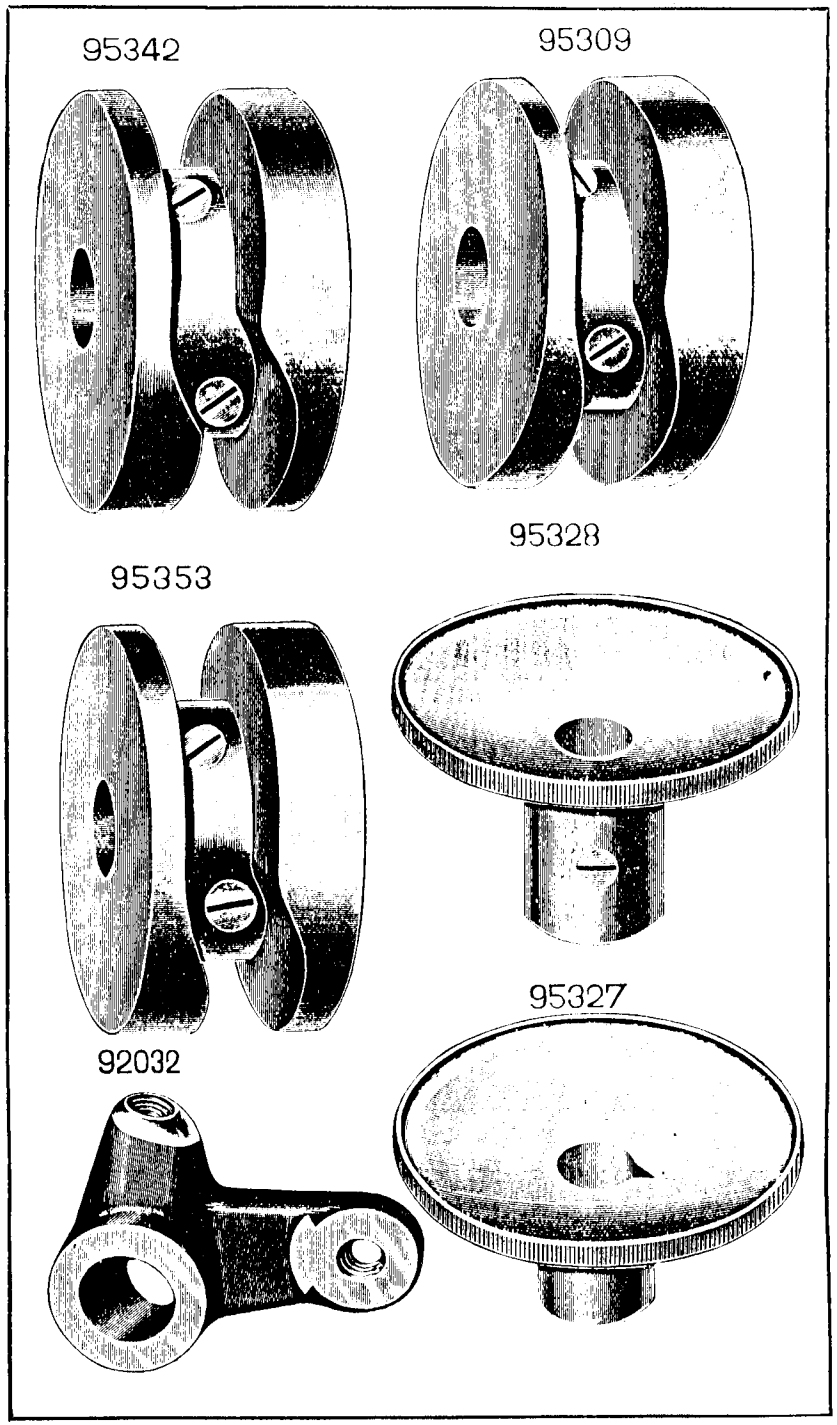

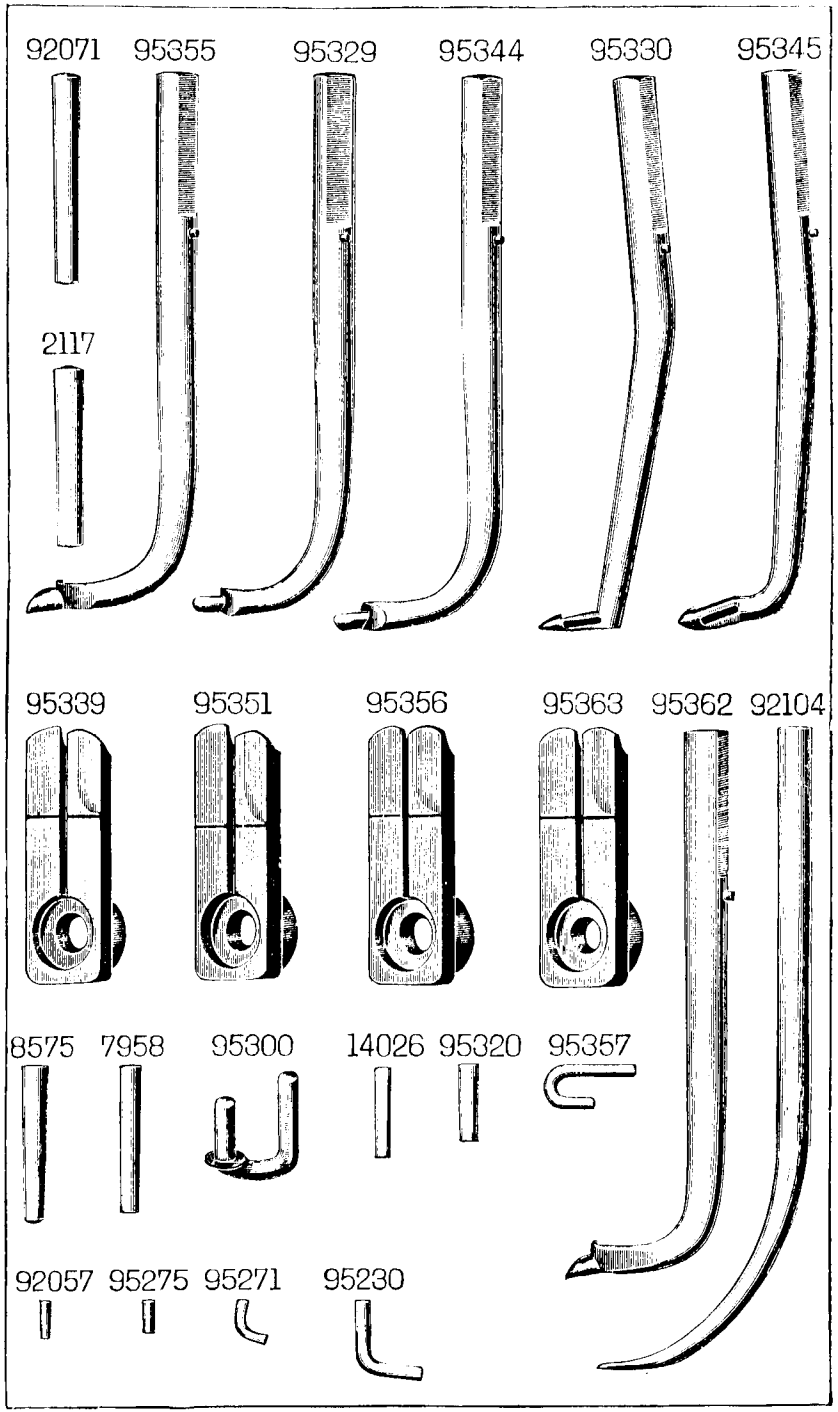

From the library of: Superior Sewing Machine & Supply LLC

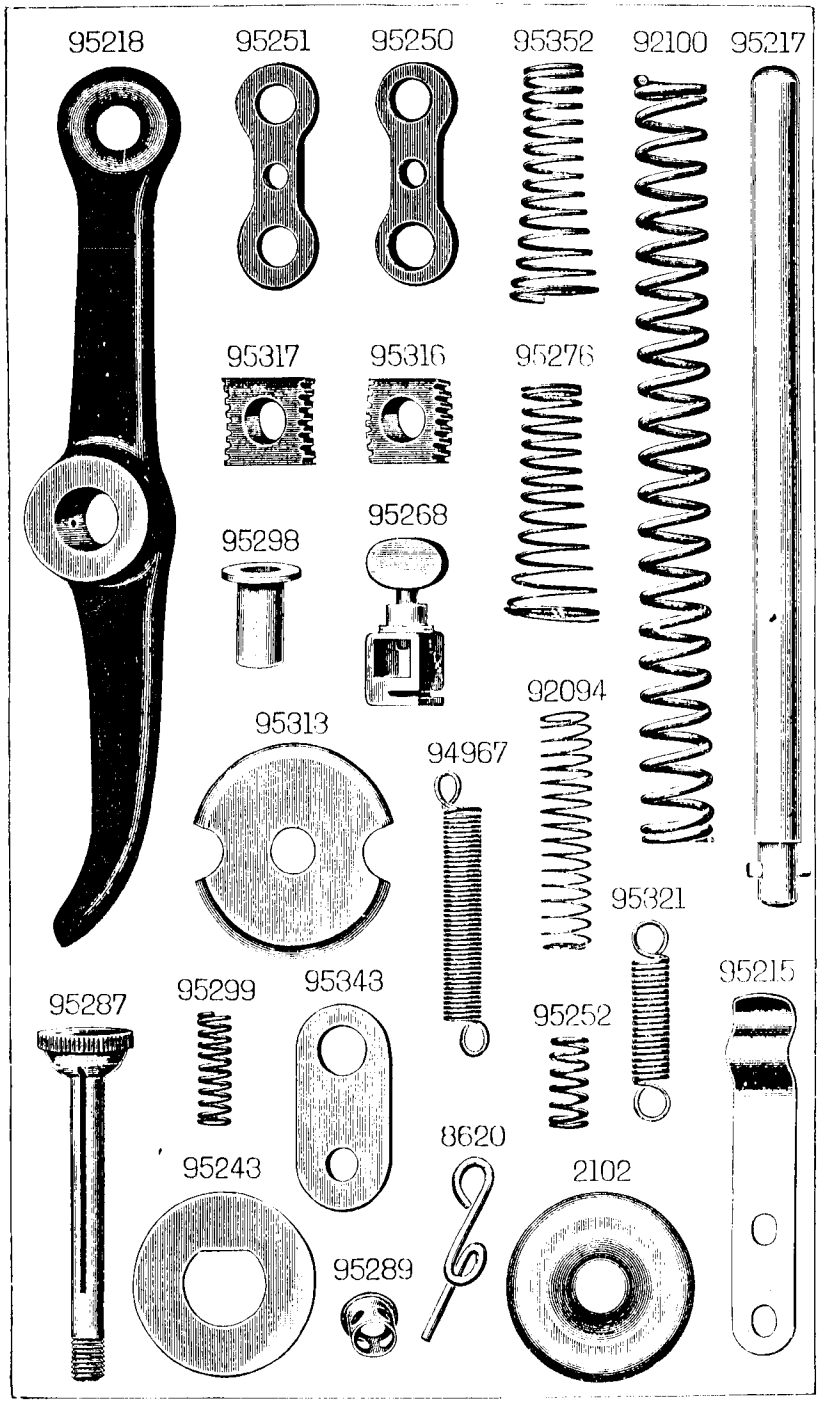

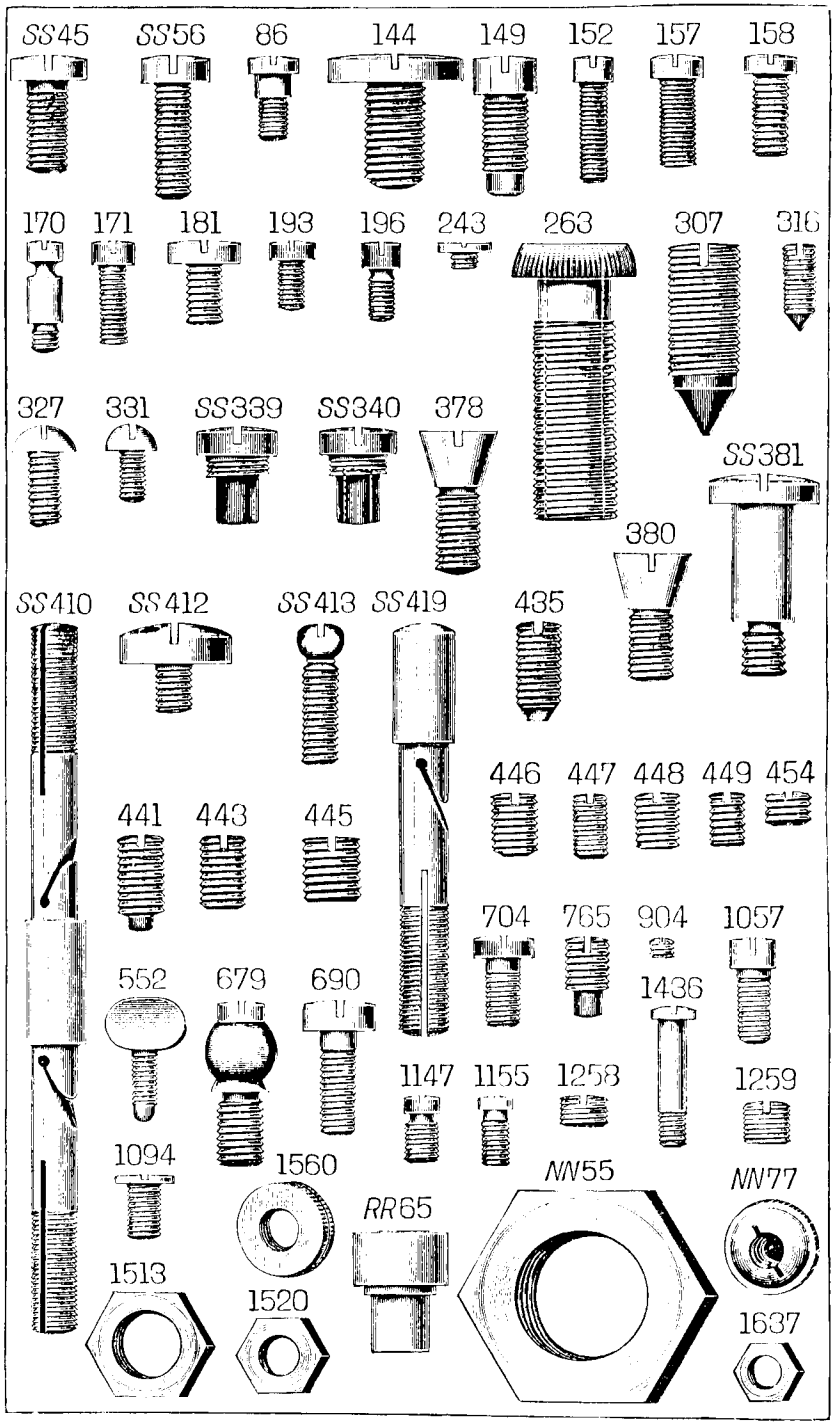

From the library of: Superior Sewing Machine & Supply LLC

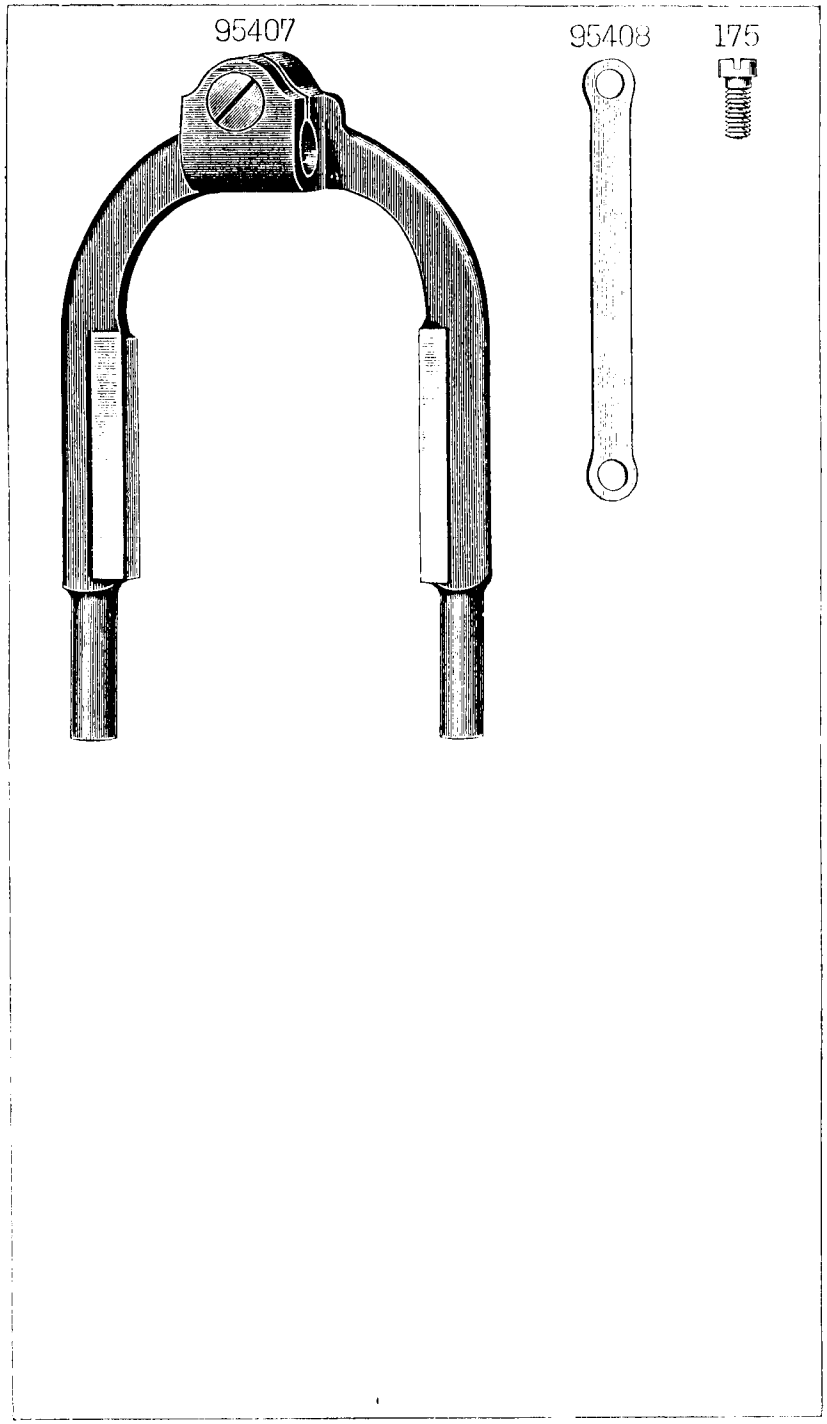

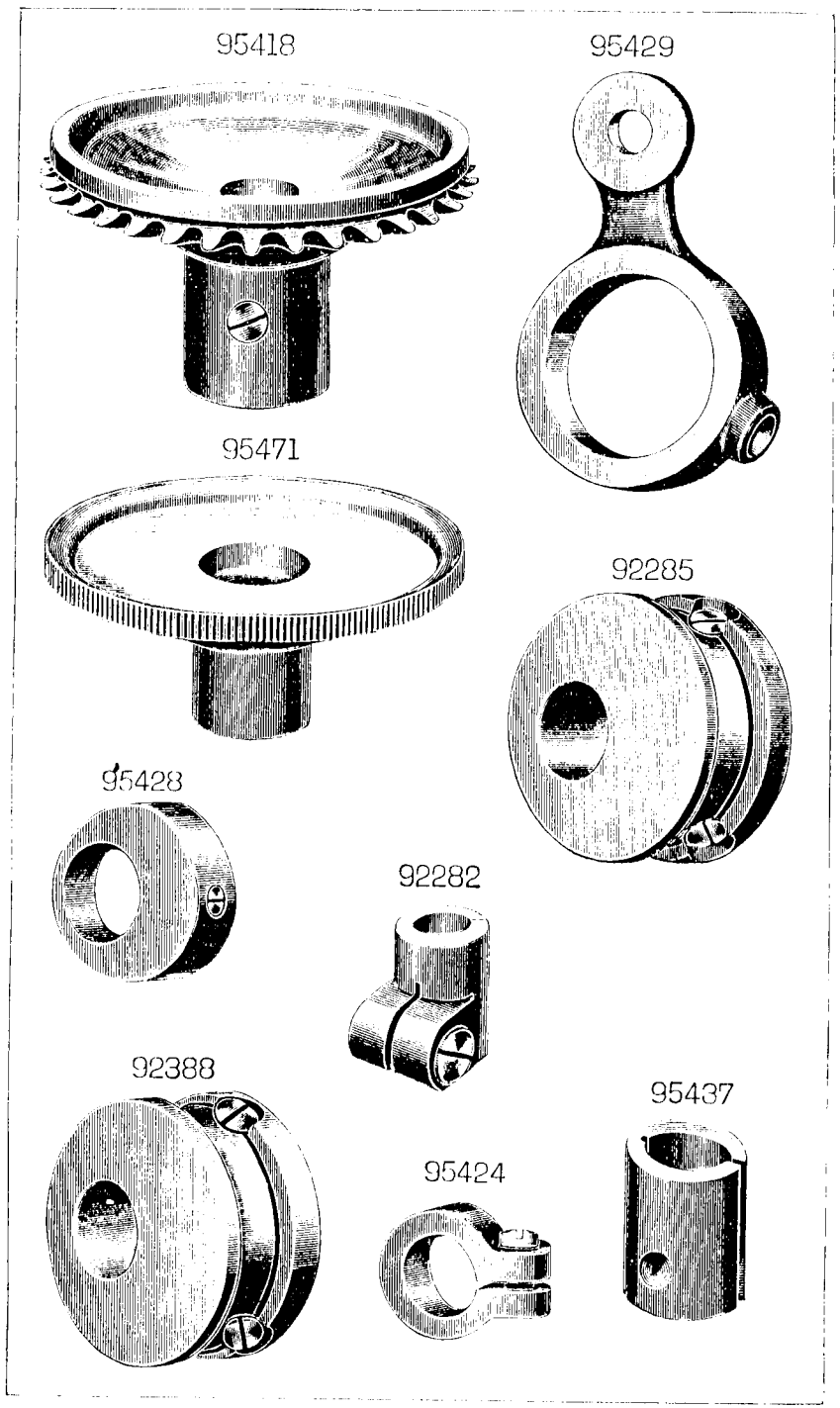

From the library of: Superior Sewing Machine & Supply LLC

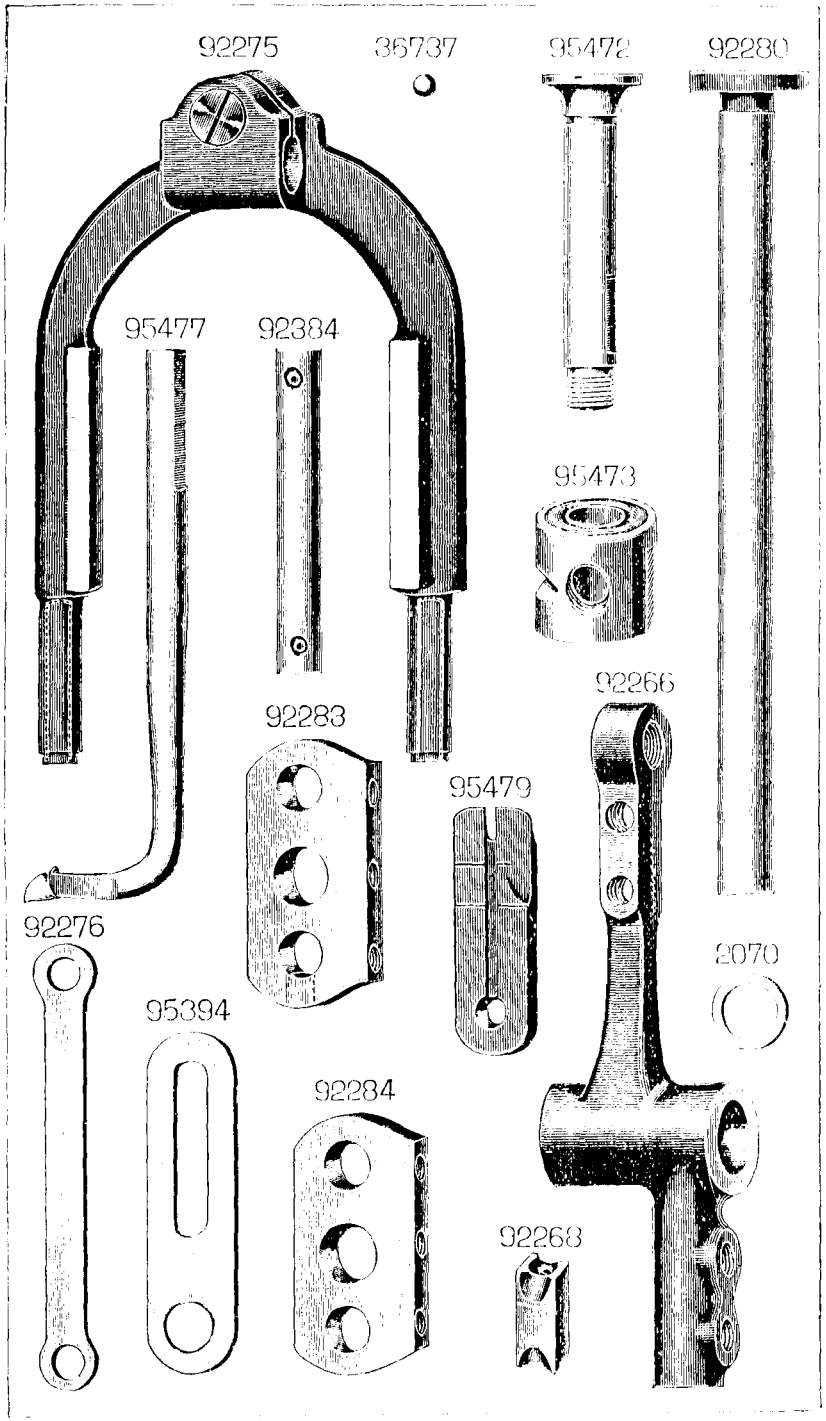

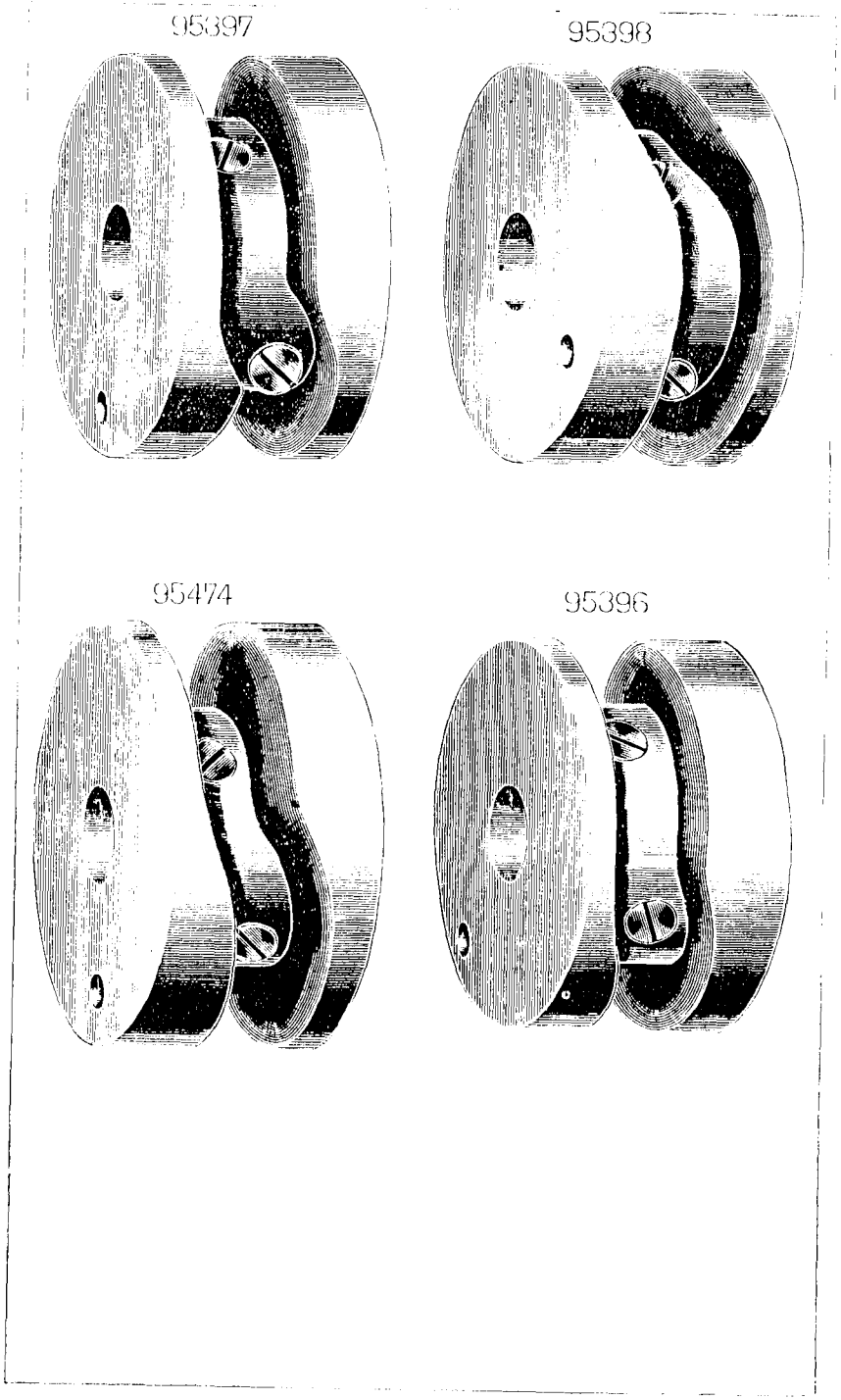

From the library of: Superior Sewing Machine & Supply LLC

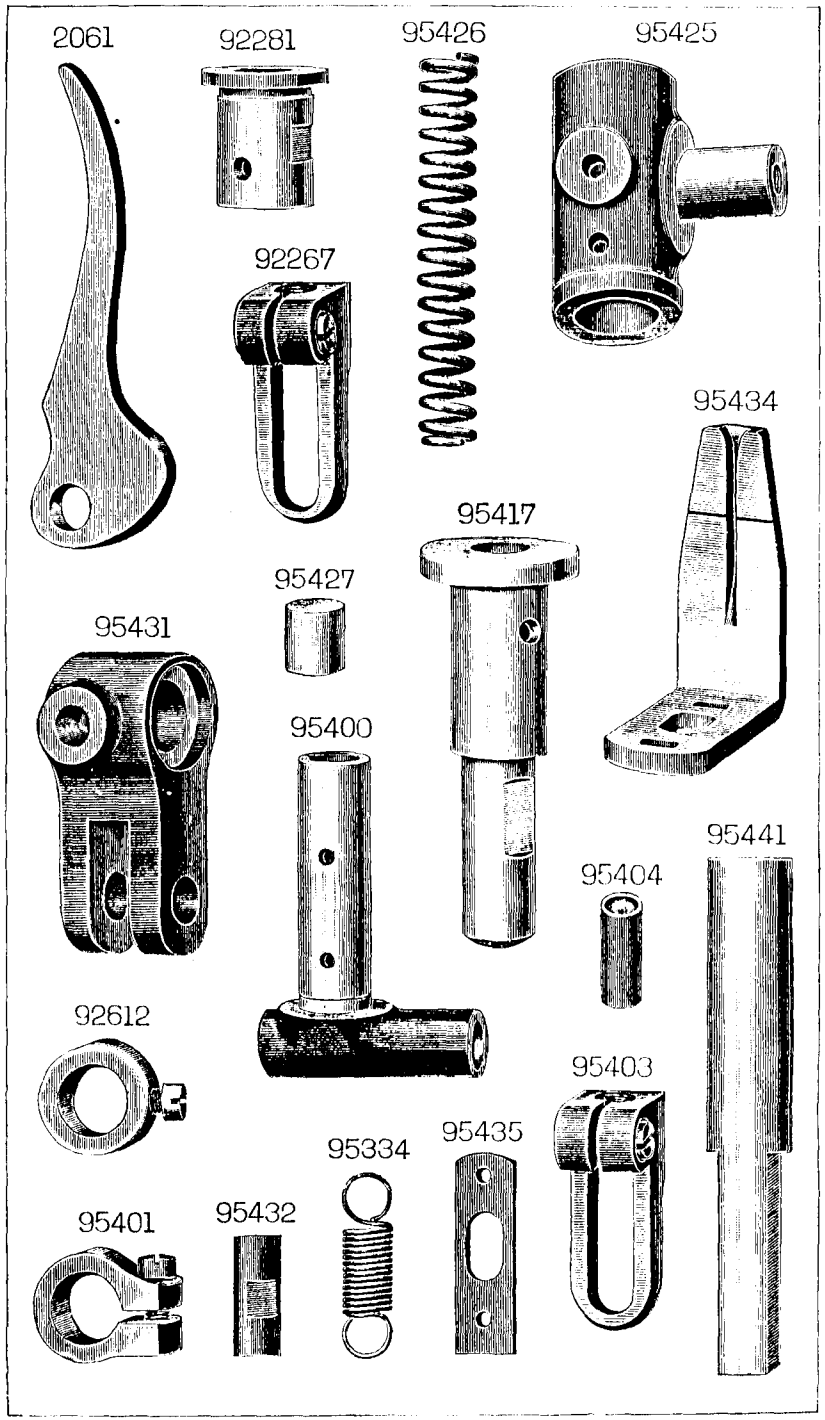

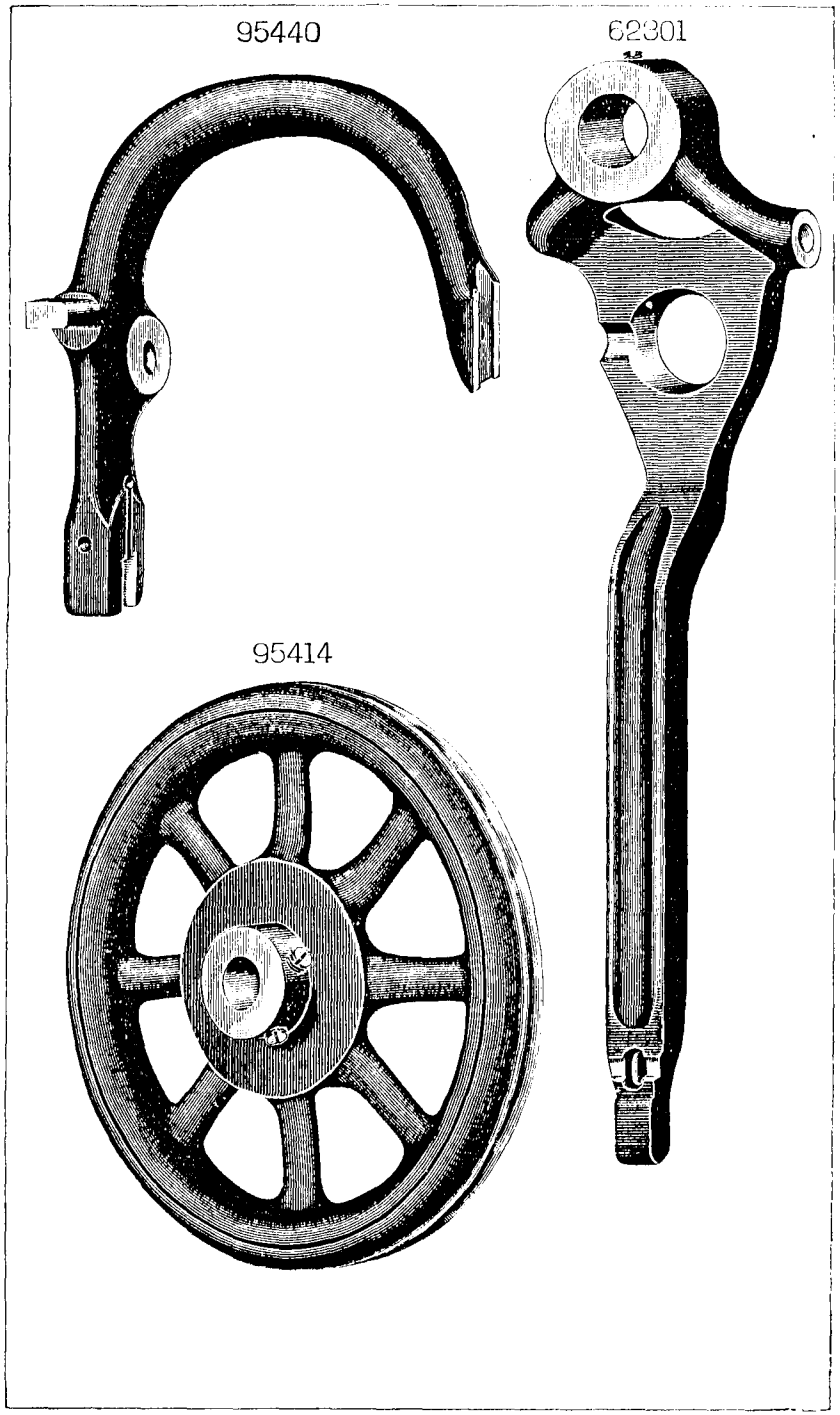

From the library of: Superior Sewing Machine & Supply LLC

95415

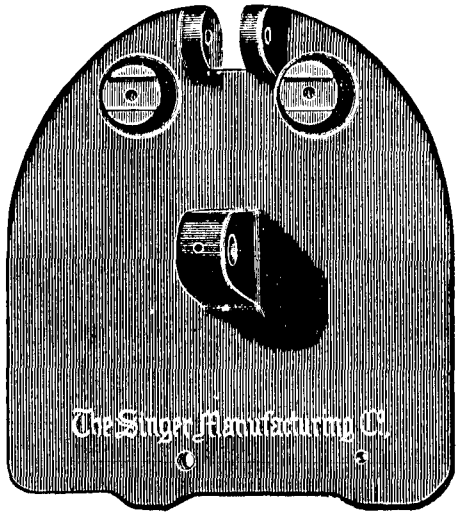

95433 95423 95478

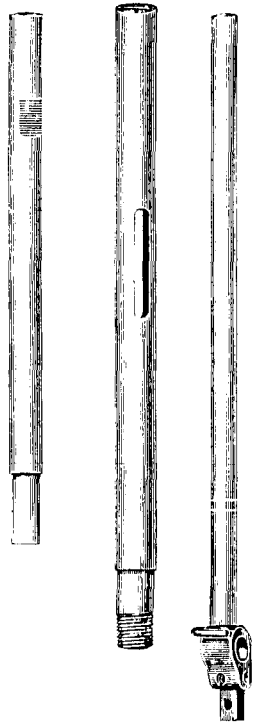

95430

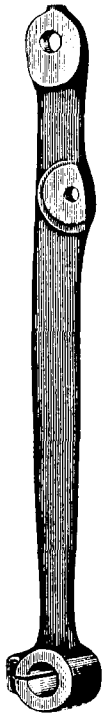

SS51 SS437 SS467 70 122 126 161



208 209 233 270

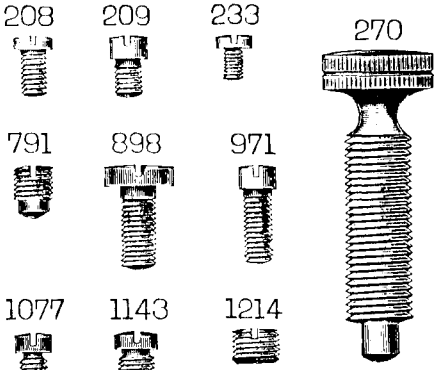

791 898 971 356 453 648

1077 1143 1214 RR68

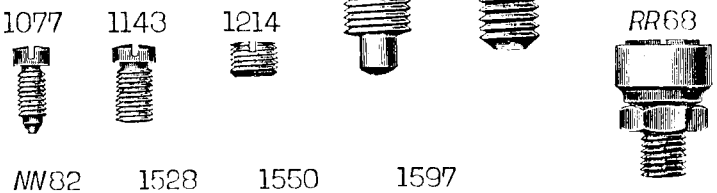

NN82 1528 1550 1597

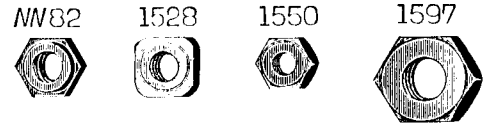

From the library of: Superior Sewing Machine & Supply LLC

ILLUSTRATED LIST OF PARTS

FOR

Nos. **46K31** to **46K37** Machines

In ordering from this List, the prefix and affix letters, with the part number, **MUST BE** quoted exactly as they are shown in the first column.

A number always indicates the same part, in whatever List it may appear, or for whatever machine.

The prefix *SS* indicates Screws made only at Singer.
" " *NN* " Nuts made only at Singer.
" " *RR* " Rollers and Studs made only at Singer.

The affix letters (where shown) indicate the style of finish, as follows : –

A. Hardened, Polished and Plated.
B. Polished and Plated.
C. Hardened only.
D. Polished only.
E. Soft, not Polished.
F. Hardened and Polished.
H. Blued.
J. Plated only.
K. Hardened and Plated.
L. Brass or Gilt.
M. Oxidized.
P. Japanned.
R. Parkerized.

In this series :—

1 to 1500 and 50001 to 51500 are Screw Numbers.
1501 " 1800 are Nut Numbers.
1801 " 2000 " Roller "
2001 " 50000 are numbers of machine parts, etc.
80001 " 100000 are numbers of machine parts, etc., made only at Singer.

Parts marked with an asterisk (*) are furnished only when the repairs are made at Factory.

PARTS COMPLETE

FOR

No. **46K34** MACHINE

For Fine Fur Work (Surjeteuse), fitted with Stitch Regulator and Friction Feed Motion. Single Thread Chain Stitch.

No.	Plate	
95308	1026	**Balance Band Wheel** with two 448c ... ...
448c	1035	" " " Set Screw ... ...
95209	1026	" " " Shaft ... ...
144d	1035	" " " " End Screw (2) ... ...
95398	1404	" " " " Looper Cam (Steel) with two 445c
445c	1035	" " " " " " Set Screw ... ...
95211	1031	" " " " Oil Hole Cover (right) ... ...
92024	1031	" " " " " " " (left) ... ...
86d	1035	" " " " " " " Hinge Screw (2) ...
95212	1026	" Hand Wheel with two 448c ... ...
448c	1035	" " " Set Screw ... ...
95213	1026	**Cover Plate** ... ...
95361	—	**Cover Plate,** complete, Nos. 331d, *SS*419f, 1560d, 95213, 95352, 95368 and two 2102 ... ...
2117	1033	**Cover Plate Hinge Pin** ... ...
95215	1034	" " Latch Spring ... ...
193f	1035	" " " " Screw (2) ... ...
62301	1406	**Feed Adjusting Lever** with 446c ... ...
446c	1035	" " " Set Screw ... ...
307c	1035	" " " Screw Centre (2) ... ...
1513j	1035	" " " " " Nut (2) ... ...
95217	1034	" " " Spindle with 14026 ... ...
14026	1033	" " " " Position Pin ... ...
92100	1034	" " " Spring ... ...
263e	1035	" " " " Regulating Thumb Screw ...
2070	1403	" " " " Washer ... ...

From the library of: Superior Sewing Machine & Supply LLC

No.	Plate	
92032	1032	**Feed Bell Crank** ... ...
92033	1030	" " " Connecting Rod with 92034, 92256 and four 196f
*92034	- -	" " " " " Cap (plain countersink) (for Friction Driver Universal Joint Screw)
*92256	- -	" " " " Rod Cap (elongated countersink) (for Bell Crank Universal Joint Screw)
196f	1035	" " " " Rod Cap Binding Screw ...
92035	1029	" " " Fulcrum Stud ... ...
448c	1035	" " " " " Set Screw ... ...
679c	1035	" " " Universal Joint Screw ... ...
95311	1027	**Feed Bracket** (front) ... ...
95221	1029	" " Stud ... ...
445c	1035	" " " Set Screw ... ...
316c	1035	" " " Raising Set Screw ... ...
*N*55c	1035	" " Nut ... ...
8211	1030	**Feed Cam** with 448c ... ...
448c	1035	" " Set Screw ... ...
2039	1031	**Feed Connecting Link** ... ...
380c	1035	" " " Hinge Screw ... ...
1520e	1035	" " " " " Nut ... ...
92041	1026	**Feed Forked Connection** ... ...
378c	1035	" " " Hinge Screw ... ...
1520e	1035	" " " " " Nut ... ...
95232	1026	**Feed Friction Shaft** (upright) ... ...
*SS*45d	1035	" " " End Screw ... ...
95313	1034	" " " " " Washer ... ...
95242	1029	" " " Friction Spring ... ...
765c	1035	" " " " " Tension Screw ... ...
95243	1034	" " " " " Washer ... ...
95233	1029	" " " Position Collar with 1258c and 1259c ...
1258c	1035	" " " " " Set Screw (short) ...
1259c	1035	" " " " " " " (long) ...
95314	1031	**Feed Friction Wheel** with 435c, 441c and two 765c ... ...
441c	1035	" " " Position Screw ... ...
435c	1035	" " " Set Screw ... ...
95315	1028	**Feed Friction Wheel Driver** ... ...
95316	1034	" " " " Block (inside) ... ...
*SS*339c	1035	" " " " " (") Screw Stud ...
95317	1034	" " " " " (outside) ... ...
*SS*340c	1035	" " " " " (") Screw Stud ...
243c	1035	" " " " " (") " " End Screw

No	Plate	
94967	1034	**Feed Friction Wheel Driver** Spring ... ...
95230	1023	" " " " " Hook ... ...
170b	1035	" " " " " Screw Stud ... ...
95318	-	**Feed Friction Wheel Driver,** complete, Nos. 170b, 243c, *SS*339c *SS*340c and 95315 to 95317
679c	1035	" " " " Universal Joint Screw ... ...
1520c	1035	" " " " " " " Nut ...
95319	1031	**Feed Friction Wheel Retaining Clutch** with 95271 ... ...
95322	1031	" " " " " Bracket with 95271 ...
95271	1033	" " " " " " Spring Hook ...
690c	1035	" " " " " Screw ...
95320	1033	" " " " " Hinge Pin ...
95331	1405	" " " " " Spring ... ...
95271	1033	" " " " " Hook ...
95323	-	**Feed Friction Wheel Retaining Clutch,** complete, Nos. 95319, 95320 and 95322
95324	1030	**Feed Regulating Lever** with 158f ... ...
158f	1035	" " " Binding Screw ... ...
8575	1033	" " " Stop Pin (2) ... ...
95325	1030	**Feed Regulator** ... ...
95326	1030	" " Bush ... ...
149f	1035	" " " Set Screw ... ...
380c	1035	" " Hinge Screw ... ...
1520e	1035	" " " " Nut ... ...
95218	1034	**Feed Roll Opening Lever** ... ...
*SS*381d	1035	" " " " Hinge Screw ... ...
95327	1032	**Feeding Disc** (front) ... ...
95328	1032	" " (back) with 454c ... ...
454c	1035	" " Set Screw ... ...
92265	-	**Head of Machine** ... ...
*SS*56d	1035	" " " Binding Screw (2) ... ...
95362	1033	**Looper** with 92057 ... ...
1147c	1035	" Binding Screw (2) ... ...
92266	1403	" Holder ... ...
92288	-	" " 92266 with *RR*68 ... ...
95244		**Looper Holder Connection,** complete, Nos. 209d, *SS*467c, 1077c, 1550j, 92280, 92283, 92284, 92288, 92384, 92388, 95260, 95332, 95400, 95401 and four 1155d ... ...

From the library of: Superior Sewing Machine & Supply LLC

No.	Plate	
92267	1405	**Looper Holder Position Link** with 171c ... ...
95254	1030	" " " " Bracket ... ...
95255	1031	" " " " " Plate ... ...
*SS*56c	1035	" " " " " " Binding Screw (2)
7958	1033	" " " " " Steady Pin (2) ...
92268	1403	" " " " Distance Rod ... ...
*SS*437c	1408	" " " " End Screw ... ...
171c	1035	" " " " " " Binding Screw ...
*SS*413c	1035	" " " " Universal Joint Screw ...
1637e	1035	" " " " " " " Nut (bottom)
*NN*82c	1408	" " " " " " " Nut (top)
92269	—	**Looper Holder Position Link,** complete, Nos. *SS*437c, 92267, 92268 and two *SS*413c
92283	1403	**Looper Holder Rock Shaft Bracket** (right side) ... ...
*SS*467c	1408	" " " " " (" ") Adjusting Screw
1550j	1408	" " " " " (" ") Adjusting Screw Nut
92284	1403	" " " " " (left side) ... ...
1155d	1035	" " " " " Set Screw (4) ... ...
92388	1402	" " " " Eccentric with two 446c ...
95332	1030	" " " " " Connecting Rod with 95333 and two 1057e
95333	—	" " " " " Connecting Rod Cap ...
1057e	1035	" " " " " " " " Screw
95260	1030	" " " " " " " Stud ...
446c	1035	" " " " " Set Screw ... ...
95400	1405	" " " " Fulcrum Joint ... ...
95401	1405	" " " " " " Collar with 171c ...
171c	1035	" " " " " " " Binding Screw
92384	1403	" " " " " " Stud ... ...
209d	1408	" " " " " " " Set Screw ...
1077c	1408	" " " " " " " Spot Screw...
95262	1027	" " " " Oil Cover ... ...
92280	1403	" " " " Stud ... ...
92281	1405	" " " " " Bushing ... ...
447c	1035	" " " " " " Set Screw ...
92282	1402	" " " " " Collar with 704c ... ...
704c	1035	" " " " " " Clamping Screw ...
*RR*68	1408	" " Roller and Screw Stud with 378c and 1520c ...
378c	1035	" " " Screw ... ...
1520c	1035	" " " " Nut ... ...
92057	1033	" Position Pin ... ...

No.	Plate	
95264	-	**Machine Base** ... ...
8294	1028	" " Hinge Connection ... ...
2809	1028	" " " Pin ... ...
95265	-	**Machine Base,** complete, Nos. 95264, two each 2809 and 8294
95337	1026	**Needle Bar** with 95357 ... ...
95267	1029	" " Bushing ... ...
443c	1035	" " " Set Screw ... ...
95268	1034	" " Clamp with 552h ... ...
552h	1035	" " " Thumb Screw ... ...
95338	1031	" " Eccentric with 449c ... ...
92071	1033	" " " Dowal Pin ... ...
92275	1403	" " " Fork with 157c ... ...
157c	1035	" " " " Clamping Screw ... ...
92276	1403	" " " " Strap ... ...
208e	1408	" " " " " Screw ... ...
92277	-	" " " " complete, Nos. 92275, 92276 and two 208e
449c	1035	" " " Set Screw ... ...
95357	1033	" " Thread Guide ... ...
95298	1034	" " " Nipper ... ...
95299	1034	" " " " Spring ... ...
95300	1035	" " " " " Adjusting Bracket ...
904c	1033	" " " " " " " Set Screw
95363	1033	**Needle Guide** with two 95275 ... ...
181d	1035	" " Binding Screw ... ...
95275	1033	" " Position Pin ... ...
92079	1027	**Reel Holder** ... ...
327d	1035	" " Binding Screw (2) ... ...
8800	1030	" " " " Washer (2) ... ...
2102	1034	**Tension Disc** ... ...
*SS*419f	1035	" Screw Stud and Thread Guide ... ...
331d	1035	" " " Set Screw ... ...
1560d	1035	" " " Thumb Nut ... ...
95352	1034	" Spring ... ...
95340	1028	**Thread Nipper Spindle** ... ...
171c	1035	" " " Binding Screw ... ...
95364	1028	**Thread Take-up Post** with 95367 ... ...
95365	1028	" " Spring ... ...
95366	1028	" " " Collar ... ...
95367	—	" " " " Stop Pin ... ...
95368	—	**Thread Take-up,** complete, Nos. 95364 to 95366 ... ...

From the library of: Superior Sewing Machine & Supply LLC

PARTS SPECIAL

TO

No. 46K35 MACHINE

For Fur Work (Surjeteuse), fitted with Stitch Regulator, Friction Feed Motion and Ball Bearing Front Feeding Disc. Single Thread Chain Stitch.

This Machine is the same as No. 46K34, with the following exceptions:

No.	Plate	
95474	1404	**Balance Band Wheel Shaft Looper Cam** (Steel) with two 445c
95354		**Cover Plate,** complete, Nos. 331d, SS419f, 1094f, 1560d, 95213, 95352, 95394 and two 2102 ... ...
95471	1402	**Feeding Disc** (front) ... ...
36737	1403	" " (") Ball, $\frac{1}{8}$" ... ...
95472	1403	" " (") Stud ... ...
95473	1403	" " (") " Bushing ... ...
1214c	1408	" " (") " " Set Screw ... ...
1597c	1408	" " (") " Nut ... ...
95476	—	**Feeding Disc** (front, Ball Bearing), complete, Nos. 1214c, 1597c, 95471 to 95473 and twenty 36737 ... ...
92104	1033	**Fur Guide** ... ...
152f	1035	" " Binding Screw ... ...
95477	1403	**Looper** ... ...
95480		**Looper Holder Connection,** complete, Nos. 209d, SS467c, 1077c, 1550j, 92280, 92283 to 92285, 92288, 92384, 95260, 95332, 95400, 95401 and four 1155d ... ...
92285	1402	**Looper Holder** Rock Shaft Eccentric with two 446c ... ...
95478	1407	**Needle Bar** with 95357 ... ...
95350	1031	" " Eccentric with 449c ... ...
95479	1403	**Needle Guide** with two 95275 ... ...
898f	1408	" " Binding Screw ... ...
95394	1403	**Thread Guide** (for Cover Plate) ... ...
1094f	1035	" " Binding Screw ... ...

PARTS SPECIAL

TO

No. 46K36 MACHINE

For Cloth Fabric and Leather Work, other than Hosiery, Gloves, Furs (Surjeteuse). Fitted with Stitch Regulator and Friction Feed Motion. Two Thread Chain Stitch.

This Machine is the same as No. 46K34 with the following exceptions:

No.	Plate	
95397	1401	**Balance Wheel Shaft Looper Cam** (Steel) with two 445c
95358		**Cover Plate,** complete, Nos. 331d, SS410f, 1094f, 95213, 95276, 95352, 95394, two 1560d and four 2102 ... ...
8620	1034	**Feed Bracket Thread Eyelet** ... ...
331d	1035	" " " " Screw ... ...
92104	1033	**Fur Guide** ... ...
152f	1035	" " Binding Screw ... ...
95345	1033	**Looper** with 92057 ... ...
95480		**Looper Holder Connection,** complete, Nos. 209d, SS467c, 1077c, 1550j, 92280, 92283 to 92285, 92288, 92384, 95260, 95332, 95400, 95401 and four 1155d ... ...
95346	1030	**Looper Holder** Position Link Bracket ... ...
92285	1402	" " Rock Shaft Eccentric with two 446c ... ...
95350	1031	**Needle Bar** Eccentric with 449c ... ...
95351	1033	**Needle Guide** with two 95275 ... ...
92108	1028	**Slack Thread Spring** ... ...
331d	1035	" " " Screw ... ...
SS410f	1035	**Tension Screw Stud and Thread Guide** ... ...
95276	1034	" Spring ... ...
95394	1403	**Thread Guide** (for Cover Plate) ... ...
1094f	1035	" " Binding Screw ... ...

From the library of: Superior Sewing Machine & Supply LLC

PARTS SPECIAL

TO

No. 46K37 MACHINE

For Turned Slipper Work; fitted with Stitch Regulator, Friction Feed Motion and Lifting Needle Guide. Single Thread Chain Stitch.

This Machine is the same as No. 46K34 with the following exceptions:

No.	Plate	
95414	1406	**Balance Band Wheel** with two 448c ... ...
95415	1407	**Cover Plate** ... ...
95416	—	**Cover Plate**, complete, Nos. 331d, SS419f, 1094l, 1560d, 95352, 95394, 95415 and two 2102 ... ...
95417	1405	**Feed Bell Crank Fulcrum Stud** ... ...
95437	1402	" Regulator Bush ... ...
95418	1402	**Feeding Disc** with 454c ... ...
92287	—	**Head of Machine** ... ...
95355	1033	**Looper** with 92057 ... ...
95480	—	**Looper Holder Connection**, complete, Nos. 209d, SS467c, 1077c, 1550j, 92280, 92283 to 92285, 92288, 92384, 95260, 95332, 95400, 95401 and four 1155d ... ...
92285	1402	**Looper Holder** Rock Shaft Eccentric with two 446c ...
95434	1405	**Needle Guide** ... ...
161f	1408	" " Binding Screw ... ...
95440	1406	" " Bracket ... ...
95441	1405	" " " Guide Bar ... ...
453c	1408	" " " " " Set Screw (2) ... ...
122e	1408	" " " Slot Adjusting Screw ... ...
	1408	" " " " " " Nut ... ...

No.	Plate	
2061	1405	**Needle Guide** Bracket Lifting Lever ... ...
70c	1408	" " " " " Hinge Screw ... ...
95423	1407	" " " Shaft ... ...
95424	1402	" " " " Adjustable Collar with 1143f ...
1143f	1408	" " " " " " Screw ...
1513j	1035	" " " " Nut ... ...
95425	1405	" " " " Sleeve ... ...
SS51c	1408	" " " " " End Screw ... ...
126d	1408	" " " " " Guide Screw ... ...
95426	1405	" " " " Spring ... ...
95427	1405	" " " " " Pad ... ...
270d	1408	" " " " " Regulating Screw ...
95428	1402	" " Eccentric with 791c ... ...
95429	1402	" " " Rod ... ...
648j	1408	" " " " Hinge Screw ... ...
95430	1407	" " " " Lever ... ...
1143e	1408	" " " " " Clamping Screw ...
95431	1405	" " " " " Link ... ...
95432	1405	" " " " " " Hinge Pin
971b	1408	" " " " " " " " Screw ...
95433	1407	" " " " " Spindle ... ...
92612	1405	" " " " " " Collar with 209c ...
209c	1408	" " " " " " " Set Screw ...
791c	1408	" " " Set Screw ... ...
95435	1405	" " Gib ... ...
233d	1408	" " " Screw ... ...
95436		**Needle Guide**, complete, Nos. 95431, 95435 and two 233d ...
95394	1403	**Thread Guide** (for Cover Plate) ... ...
1094l	1035	" " Binding Screw ... ...

From the library of: Superior Sewing Machine & Supply LLC

ACCESSORIES

No.	Plate	
46 × 5		Needles (3 each), sizes 14 and 16 for 46K31, 46K32, 46K35 and 46K36 Machines ... ...
215 × 9		Needles (3 each), sizes 14 and 16 for 46K33 and 46K37 Machines
46 × 5		" (3 "), " 8 " 10 " 46K34 Machines ... ...
36569		Oiler ... ...
25537		Screw Driver ... ...
86262	1026	Tweezers for 46K31 to 46K36 Machines ... ...
86405		" " 46K37 Machine ... ...
		Wood Screw $1\frac{1}{2}'' \times \frac{1}{4}''$ (3) ... ...

KNEE LIFTER

No.	Plate	
2767	1023	**Knee Plate** with 356c ... ...
356c	1408	" " Set Screw ... ...
92464	1023	" " Arm ... ...
2766	1023	" " " Bracket with 356c ... ...
356c	1408	" " " " Set Screw ... ...
92465	1023	**Lifting Lever** ... ...
SS345c	1023	" " Hinge Screw ... ...
92466	1023	" " Bracket ... ...
		" " " Screw (Wood) 1" No. 10 ... ...
92008	1023	" " Connecting Rod ... ...
92009		" " " " 92008 with 6337 ... ...
6337	1023	" " " " Bracket with two 356c ...
356c	1408	" " " " " Set Screw ... ...
95302		" " 92465 with 180d, 210d, SS345c, 92466, 92469 and 95303
95303	1023	" " Releasing Pin ... ...
95304	1023	" " " " Guide Plate ... ...
		" " " " " " Screw (Wood) 1" No. 10
180d	1023	" " " " Set Screw ... ...
92469	1023	" " Stud ... ...
210d	1023	" " " Position Screw ... ...
92470	1023	**Rock Shaft** ... ...
92471		" " 92470 with 2766, 2767, 92009 and 92464 ... ...
82479	1023	" " Bracket ... ...
		" " " Screw (Wood) 1" No. 10 ... ...
95305	—	**Knee Lifter**, complete, Nos. 92471, 95302, 95304, two 82479 and nine Wood Screws 1" No. 10 ... ...

From the library of: Superior Sewing Machine & Supply LLC

PARTS COMPLETE

FOR

No. 46K31 MACHINE

(OBSOLETE)

□

For Fine Fur Work (Surjeteuse), fitted with Stitch Regulator and Friction Feed Motion, Single or Double Chain Stitch.

No.	Plate	
95308	1026	**Balance Band Wheel** with two 448c ... ...
448c	1035	" " " Set Screw ... ...
95209	1026	" " " Shaft ... ...
144d	1035	" " " " End Screw (2) ... ...
95396	1404	" " " " Looper Cam (Steel) with two 445c
445c	1035	" " " " " " Set Screw ... ...
95211	1031	" " " " Oil Hole Cover (right) ... ...
92024	1031	" " " " " " " (left) ... ...
86d	1035	" " " " " " " Hinge Screw (2) ...
95212	1026	" Hand Wheel with two 448c ... ...
448c	1035	" " " Set Screw ... ...
95213	1026	**Cover Plate** ... ...
95310	—	**Cover Plate,** complete, Nos. 331d, SS410f, 95213, 95311, two each 1560d, 95276 and four 2102 ... ...
2117	1033	**Cover Plate Hinge Pin** ... ...
95215	1034	" " Latch Spring ... ...
193f	1035,	" " " " Screw (2) ... ...
95216	1027	**Feed Adjusting Lever** with 446c ... ...
446c	1035	" " " Set Screw ... ...
307c	1035	" " " Screw Centre (2) ... ...
1513j	1035	" " " " " Nut (2) ... ...
95217	1034	" " " Spindle with 14026 ... ...
14026	1033	" " " " Position Pin ... ...
92100	1034	" " " Spring ... ...
263e	1035	" " " " Regulating Thumb Screw ...
2070	1403	" " " " Washer ... ...

No.	Plate	
92032	1032	**Feed Bell Crank** ... ...
92033	1030	" " " Connecting Rod with 92034, 92256 and four 196f
*92034		" " " " " Cap (plain countersink) (for Friction Driver Universal Joint Screw)
*92256		" " " " Rod Cap (elongated countersink) (for Bell Crank Universal Joint Screw)
196f	1035	" " " " Rod Cap Binding Screw ...
92035	1029	" " " Fulcrum Stud ... ...
448c	1035	" " " " " Set Screw ... ...
679c	1035	" " " Universal Joint Screw ... .
95311	1027	**Feed Bracket** (front) ... ...
95221	1029	" " Stud ... ...
445c	1035	" " " Set Screw ... ...
316c	1035	" " " Raising Set Screw ... ...
NN55e	1035	" " Nut ... ...
8620	1031	" " Thread Eyelet ... ...
331d	1035	" " " " Screw ... ...
2039	1031	**Feed Connecting Link** ... ...
380c	1035	" " " Hinge Screw ... ...
1520e	1035	" " " " " Nut ... ...
95312	1030	**Feed Eccentric** with 448c ... ...
448c	1035	" " Set Screw ... ...
92041	1026	**Feed Forked Connection** ... ...
378c	1035	" " " Hinge Screw ... ...
1520e	1035	" " " " " Nut ...
95232	1026	**Feed Friction Shaft** (upright) ... ...
SS45d	1035	" " " End Screw ... ...
95313	1031	" " " " " Washer ... ...
95242	1029	" " " Friction Spring ... ...
765c	1035	" " " " " Tension Screw ...
95243	1034	" " " " " Washer ... ...
95233	1029	" " " Position Collar with 1258c and 1259c ...
1258c	1035	" " " " " Set Screw (short) ...
1259c	1035	" " " " " " " (long) ... ...
95314	1031	**Feed Friction Wheel** with 435c, 441c and two 765c ... ...
441c	1035	" " " Position Screw ... ...
435c	1035	" " " Set Screw ... ...
95315	1028	**Feed Friction Wheel Driver** ... ...
95316	1034	" " " " Block (inside) ... ...
SS339c	1035	" " " " " (") Screw Stud ...

From the library of: Superior Sewing Machine & Supply LLC

No.	Plate	
95317	1034	**Feed Friction Wheel Driver Block** (outside) ... ...
SS340c	1035	" " " " " (") Screw Stud ...
243c	1035	" " " " " (") " " End Screw
94967	1034	" " " " Spring ... ...
95230	1033	" " " " " Hook ... ...
170b	1035	" " " " " Screw Stud ... ...
95318		**Feed Friction Wheel Driver,** complete, Nos. 170b 243c *SS339c*, *SS340c* and 95315 to 95317
679c	1035	" " " " Universal Joint Screw ... ...
1520c	1035	" " " " " " " Nut ...
95319	1031	**Feed Friction Wheel Retaining Clutch** with 95271 ...
95322	1031	" " " " " Bracket with 95271 ...
95271	1033	" " " " " " Spring Hook
690c	1035	" " " " " " Screw ...
95320	1033	" " " " " Hinge Pin ... ...
95321	1034	" " " " " Spring ... ...
95271	1033	" " " " " " Hook ...
95323		**Feed Friction Wheel Retaining Clutch,** complete, Nos. 95319 95320 and 95322
95324	1030	**Feed Regulating Lever** with 158f ... ...
158f	1035	" " " Binding Screw ... ...
8575	1033	" " " Stop Pin (2) ... ...
95325	1030	**Feed Regulator** ... ...
95326	1030	" " Bush ... ...
149f	1035	" " " Set Screw ... ...
380c	1035	" " Hinge Screw ... ...
1520c	1035	" " " " Nut ... ...
95218	1034	**Feed Roll Opening Lever** ... ...
SS381d	1035	" " " " Hinge Screw ... ...
95327	1032	**Feeding Disc** (front) ... ...
95328	1032	" " (back) with 454c ... ...
454c	1035	" " Set Screw ... ...
92104	1033	**Fur Guide** ... ...
152f	1035	" " Binding Screw ... ...
95306	-	**Head of Machine** ... ...
SS56d	1035	" " " Binding Screw (2) ... ...
95329	1033	**Looper** with 92057 (single chain) ... ...
95330	1033	" " 92057 (double chain) ... ...
1147c	1035	" Binding Screw (2) ... ...

NOTE.—No. 95330 is supplied with this machine unless other Looper is specified on order.

No.	Plate	
95248		**Looper** Holder ... ...
95249	1029	" " 95248 with *RR65* ... ...
95403	1105	**Looper Holder Position Link** with 171c ... ...
95254	1030	" " " " Bracket ... ...
95255	1031	" " " " " Plate ... ...
SS56c	1035	" " " " " " Binding Screw (2)
7958	1033	" " " " " Steady Pin (2) ...
95404	1105	" " " " Distance Rod ... ...
SS437c	1108	" " " " End Screw ... ...
171c	1035	" " " " " " Binding Screw ...
SS413c	1035	" " " " Universal Joint Screw ...
1637c	1035	" " " " " " " Nut (bottom)
NN82c	1108	" " " " " " " Nut (top)
95399		**Looper Holder Position Link,** complete, Nos. *SS437c*, 95403, 95404 and two *SS413c* ... ...
95256	1029	**Looper Holder Rock Shaft Bracket** (right side) ... ...
95257	1029	" " " " " (left side) ... ...
1155d	1035	" " " " Set Screw (6) ... ...
95331	1028	" " " " Eccentric with two 116c ...
95332	1030	" " " " " Connecting Rod with 95333 and two 1057c
95333		" " " " " " Rod Cap ...
1057c	1035	" " " " " " " " Screw
95260	1030	" " " " " " " Stud ...
116c	1035	" " " " " Set Screw ...
95400	1105	" " " " Fulcrum Joint ... ...
95401	1105	" " " " " " Collar with 171c ...
171c	1035	" " " " " " " Binding Screw
95260	1030	" " " " " " Stud ... ...
95262	1027	" " " " Oil Cover ... ...
95307	1028	" " " " Stud ... ...
95335	1028	" " " " " Bushing ... ...
117c	1035	" " " " " " Set Screw ... ...
95336	1028	" " " " " Collar with 701c ... ...
701c	1035	" " " " " " Clamping Screw ...
RR65	1035	" " Roller and Stud ... ...
92057	1033	" Position Pin ... ...
95264		**Machine Base** ... ...
8294	1028	" " Hinge Connection ... ...
2809	1028	" " " Pin ... ...
95265	-	**Machine Base,** complete, Nos. 95264, two each 2809 and 8294

From the library of: Superior Sewing Machine & Supply LLC

No.	Plate	
95337	1026	**Needle Bar** with 95357 ... ...
95267	1029	" " Bushing ... ...
443c	1035	" " " Set Screw ... ...
95268	1034	" " Clamp with 552h ... ...
552h	1035	" " " Thumb Screw ... ...
95338	1031	" " Eccentric with 449c ... ...
92071	1033	" " " Dowal Pin ... ...
95407	1308	" " " Fork with 157c ... ...
157c	1035	" " " " Clamping Screw ... ...
95408	1308	" " " " Strap ... ...
175c	1308	" " " " " Screw ... ...
95409	—	" " " " complete, Nos. 95407, 95408 and two 175c
449c	1035	" " " Set Screw ... ...
95357	1033	" " Thread Guide ... ...
95298	1034	" " " Nipper ... ...
95299	1034	" " " " Spring ... ...
95300	1033	" " " " " Adjusting Bracket ...
904c	1035	" " " " " " " Set Screw
95339	1033	**Needle Guide** with two 95275 ... ...
181d	1035	" " Binding Screw ... ...
95275	1033	" " Position Pin ... ...
92079	1027	**Reel Holder** ... ...
327d	1035	" " Binding Screw (2) ... ...
8800	1030	" " " " Washer (2) ... ...
92108	1028	**Slack Thread Spring** (for double chain) ... ...
331d	1035	" " " Screw ... ...
2102	1034	**Tension Disc** ... ...
SS410f	1035	" Screw Stud and Thread Guide ... ...
331d	1035	" " " Set Screw ... ...
1560d	1035	" " " Thumb Nut ... ...
95276	1034	" Spring ... ...
95340	1028	**Thread Nipper Spindle** ... ...
171c	1035	" " " Binding Screw ... ...
95286	—	**Thread Take-up Post** ... ...
95287	1034	" " " 95286 with NN77d ... ...
NN77d	1035	" " " Thumb Nut ... ...
92094	1034	" " Spring ... ...
95289	1034	" " " Collar ... ...
95341		**Thread Take-up,** complete, Nos. 92094, 95287 and 95289 ...

PARTS SPECIAL

TO

No. 46K32 MACHINE

(OBSOLETE)

□

For Fur Work (Surjeteuse), fitted with Stitch Regulator and Friction Feed Motion. Single or Double Chain Stitch.

This Machine is the same as No. 46K31, with the following exceptions :

No.	Plate	
95397	1404	**Balance Band Wheel Shaft Looper Cam** (Steel) with two 445c
95358		**Cover Plate,** complete, Nos. 331d, SS410f, 1094f, 95213, 95276, 95352, 95394, two 1560d and four 2102 ... ...
8211	1030	**Feed Cam** with 448c ... ...
448c	1035	" " Set Screw ... ...
95344	1033	**Looper** with 92057 (single chain) ... ...
95345	1033	" " 92057 (double chain) ... ...
95346	1030	" Holder Position Link Bracket ... ...
95347	1029	" " Rock Shaft Bracket (right side) ... ...
95348	1029	" " " " " (left side) ... ...
95349	1028	" " " " Eccentric with two 446c ... ...
		NOTE. No. 95345 is supplied with this machine unless other Looper is specified on order
95350	1031	**Needle Bar Eccentric** with 449c ... ...
95351	1033	" Guide with two 95275 ... ...
95352	1034	**Tension Spring** ... ...
95394	1403	**Thread Guide** (for Cover Plate) ... ...
1094f	1035	" " Binding Screw ... ...

From the library of: Superior Sewing Machine & Supply LLC

PARTS SPECIAL

TO

No. 46K33 MACHINE

(OBSOLETE)

□

For Fur Work (Surjeteuse), fitted with Stitch Regulator and Friction Feed Motion. Single Thread Chain Stitch only.

This Machine is the same as No. 46K31, with the following exceptions:

No.	Plate	
95398	1404	**Balance Band Wheel Shaft Looper Cam** (Steel) with two 445c
95354		**Cover Plate,** complete, Nos. 331d, SS419f, 1094f, 1560d, 95213, 95352, 95394 and two 2102 ... ...
8211	1030	**Feed Cam** with 448c ... ...
448c	1035	" " Set Screw ... ...
95334	1405	**Feed Friction Wheel Retaining Clutch Spring** ... ...
95355	1033	**Looper** with 92057 (single chain) ... ...
95347	1029	" Holder Rock Shaft Bracket (right side) ... ...
95348	1029	" " " " " (left side) ... ...
95349	1028	" " " " Eccentric with two 446c ... ...
95356	1033	**Needle Guide** with two 95275 ... ...
SS419f	1035	**Tension Screw Stud and Thread Guide** ... ...
95352	1034	" Spring ... ...
95394	1403	**Thread Guide** (for Cover Plate) ... ...
1094f	1035	" " Binding Screw ... ...

NUMERICAL LIST OF PARTS

No.	Plate	
SS45d	1035	Feed Friction Shaft End Screw ... ...
SS51c	1408	Needle Guide Bracket Shaft Sleeve End Screw for 46K37 Machine ... ...
NN55c	1035	Feed Bracket Nut ... ...
SS56d	1035	Head of Machine Binding Screw ... ...
SS56e	1035	Looper Holder Position Link Bracket Plate Binding Screw ... ...
RR65	1035	Looper Holder Roller and Stud for 95249 (Obsolete)
RR68	1408	Looper Holder Roller and Screw Stud, with 378c and 1520c, for 92288 ... ...
70c	1408	Needle Guide Bracket Lifting Lever Hinge Screw for 46K37 Machine ... ...
NN77d	1035	Thread Take-up Post Thumb Nut for 95287 (Obsolete)
NN82c	1408	Looper Holder Position Link Universal Joint Screw Nut (top) ... ...
86d	1035	Balance Band Wheel Shaft Oil Hole Cover Hinge Screw ... ...
122c	1408	Needle Guide Bracket Slot Adjusting Screw for 46K37 Machine ... ...
126d	1408	Needle Guide Bracket Shaft Sleeve Guide Screw for 46K37 Machine ... ...
144d	1035	Balance Band Wheel Shaft End Screw ...
149f	1035	Feed Regulator Bush Set Screw ... ...
152f	1035	Fur Guide Binding Screw for 46K31, 46K32, 46K35 and 46K36 Machines ... ...
157c	1035	Needle Bar Eccentric Fork Clamping Screw for 92275 and 95407 ... ...
158f	1035	Feed Regulating Lever Binding Screw for 95324 ... ...
161f	1408	Needle Guide Binding Screw for 46K37 Machine ... ...
170b	1035	Feed Friction Wheel Driver Spring Screw Stud for 95318 ... ...
171c	1035	Looper Holder Position Link End Screw Binding Screw for 92267 and 95403 ...
171e	1035	Looper Holder Rock Shaft Fulcrum Joint Collar Binding Screw for 95401 ...

From the library of: Superior Sewing Machine & Supply LLC